Electrolux | ICON™

BUILT-IN DISHWASHER	EDW5500DSS
FEATURES	
Size	24"
Stainless Steel Interior	Yes
Control Type	Electronic
Global DIVA Wash System	Yes
Easy-Clean Pushbuttons	9
Digital Display	Yes
Smart Soil Sensor	Yes
Removable Filter Trap	Yes
Stainless Steel Filter	Yes
Sound Insulation Package	UltraQuiet™Plus
Wash Levels	5
Pulsating Direct Feed Wash System	Yes
Forced Air Condensate Dry System	Yes
Detergent Dispenser	Yes
Adjustable Rinse Aid Dispenser w/Indicator	Yes
CYCLES	
Auto Wash	Yes
Heavy	Yes
Normal	Yes
Short/Light	Yes
Rinse Hold	Yes
OPTIONS	
Hi-Temp Wash	Yes
NSF-Certified Sanitize Rinse	Yes
Hi-Temp Rinse	Yes
Delay Start	0-24 hrs.
RACK SYSTEM	
Upper Rack	Premium
Cup Shelf	Yes
Stemware Holder	Yes
Fold-Downs	Yes
Lower Rack	Premium
Fold-Down Tines	Yes
Rack Type	Nylon
Integrated Utility/Silverware Basket	Yes
Small Item Covers	Yes
SPECIFICATIONS	
Leveling Legs	Yes
Water Usage - Normal Cycle	4.9-7.3 Gals.
Water Pressure	20-120 PSI
Inline Heater	1200W
Connected Load (kW Rating) - 120V AC	1.4kW (12 Amps)
Electrical – Single phase, 2-wire with separate equipment grounding conductor. 60 Hertz AC electrical supply only	Required
Product Weight	109 Lbs.
Shipping Weight	123 Lbs.
UPC (0-12505-)	10745-0
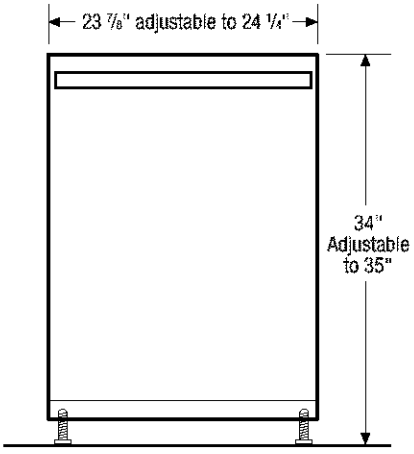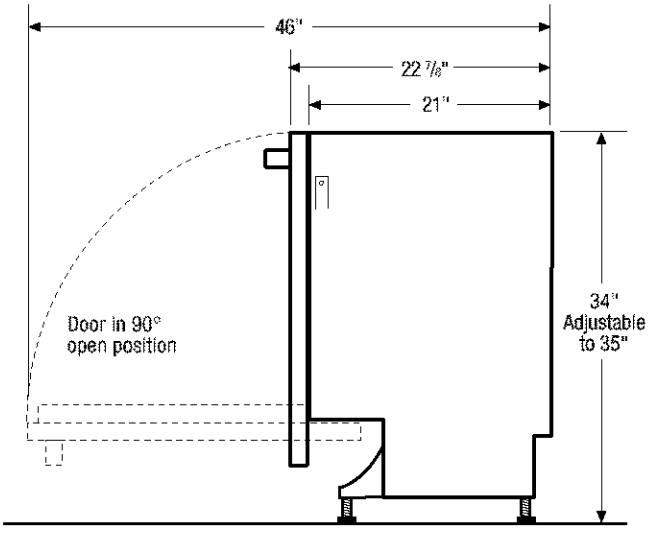
NOTE: Always consult local and/or national electric codes. Refer to Product Installation Guide for detailed installation instructions or visit us on the web at *www.electroluxusa.com*.