Owner's Manual

CRAFTSMAN®

1 HP (Maximum Developed)
2" x 42" Belt
8" Disc

Belt/Disc Sander

Model No. 137.215280

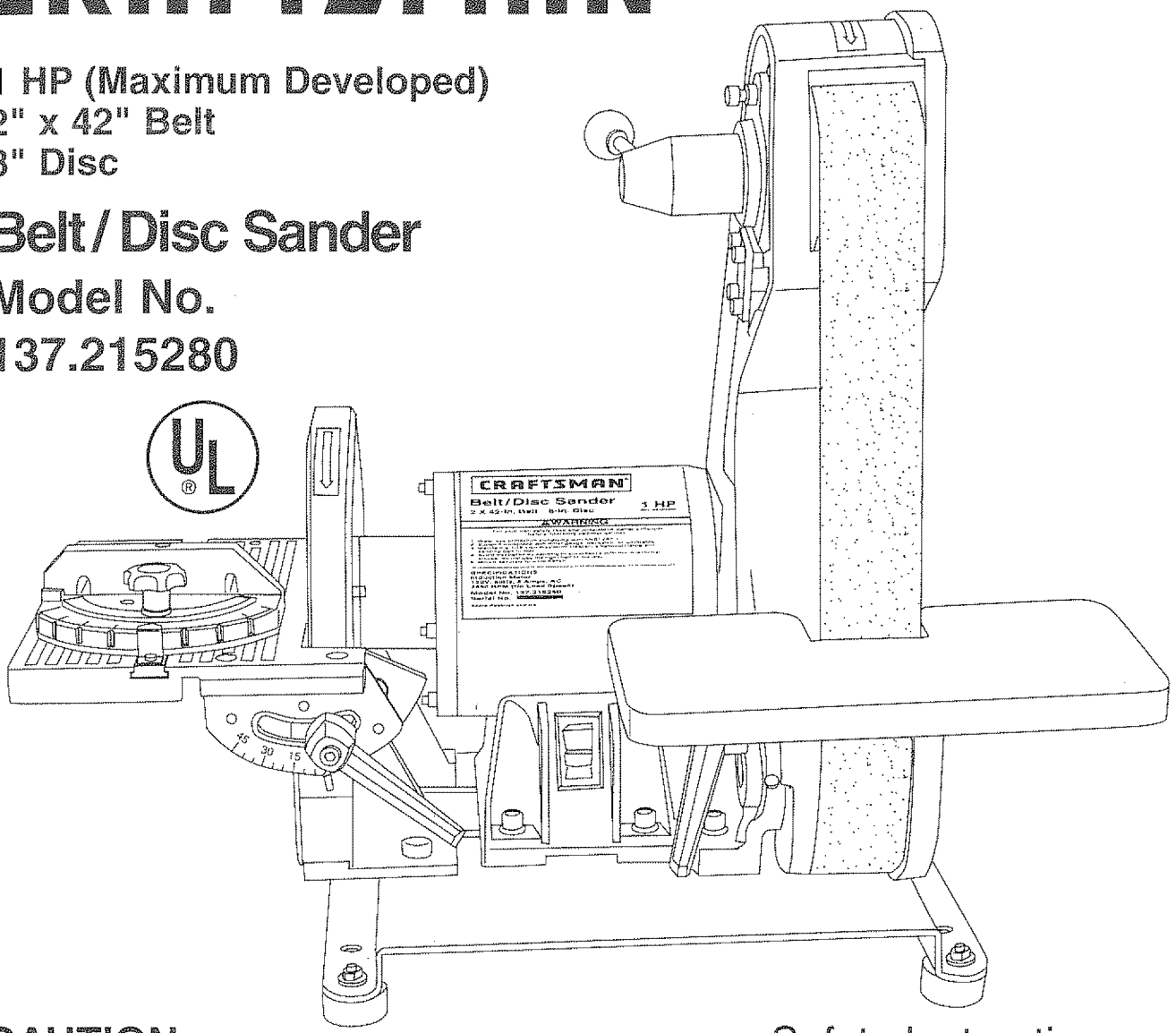

CAUTION:
Before using this belt / disc sander, read this manual and follow all its Safety Rules and Operating Instructions.

- Safety Instructions
- Installation
- Operation
- Maintenance
- Parts List

Customer Help Line
1-800-843-1682

Sears, Roebuck and Co., Hoffman Estates, IL 60179 USA
Part No. 137215280001

TABLE OF CONTENTS

SECTION PAGE

PRODUCT SPECIFICATIONS

MOTOR	120 V AC, 60 HZ, 6.2 AMPS
HORSEPOWER	1 HP (Max. Developed)
BELT SPEED	3100 FPM (No Load)
BELT SIZE	2" X 42"
DISC SPEED	3450 RPM (No Load)
DISC SIZE	8"
BELT TABLE SIZE	10" X 6"
DISC TABLE SIZE	10-3/4" X 7-1/2"
TABLE ADJUSTMENTS	0° - 45°
DUST CHUTE PORT	YES
NET WEIGHT	55 lbs

⚠ WARNING

To avoid electrical hazards, fire hazards, or damage to the tool, use proper circuit protection.

Your belt/disc sander is wired at the factory for 120V operation. Connect to a 120V, 15 AMP branch circuit and use a 15 AMP time delay fuse or circuit breaker. To avoid shock or fire, replace power cord immediately if it is worn, cut or damaged in any way.

WARNING

⚠ WARNING

Some dust created by power sanding sawing, grinding, drilling, and other construction activities contains chemicals known [to the State of California] to cause cancer, birth defects or other reproductive harm. Some examples of these chemicals are:

- Lead from lead-based paints.
- Crystalline silica from bricks and cement and other masonry products, and
- Arsenic and chromium from chemically-treated lumber.

Your risk from these exposures varies, depending on how often you do this type of work. To reduce your exposure to these chemicals: work in a well ventilated area, and work with approved safety equipment, such as those dust masks that are specially designed to filter out microscopic particles.

SAFETY

GENERAL SAFETY INSTRUCTIONS

BEFORE USING THE BELT / DISC SANDER

Safety is a combination of common sense, staying alert and knowing how to use your belt / disc sander.

⚠ WARNING

To avoid mistakes that could cause serious injury, do not plug the belt/disc sander in until you have read and understood the following:

1. **READ** and become familiar with this entire instruction manual. LEARN the tool's applications, limitations, and possible hazards.
2. **KEEP GUARDS IN PLACE** and in working order.
3. **REMOVE ADJUSTING KEYS AND WRENCHES.** Form the habit of checking to see that keys and adjusting wrenches are removed from the tool before turning ON.
4. **KEEP WORK AREA CLEAN.** Cluttered areas and benches invite accidents.
5. **DON'T USE IN A DANGEROUS ENVIRONMENT.** Don't use power tools in damp or wet locations, or expose them to rain. Keep work area well lighted.
6. **KEEP CHILDREN AWAY.** All visitors should be kept at a safe distance from the work area.
7. **MAKE WORKSHOP KID PROOF** with padlocks, master switches, or by removing starter keys.
8. **DON'T FORCE THE TOOL.** It will do the job better and safer at the rate for which it was designed.
9. **USE THE RIGHT TOOL.** Don't force tool or the attachment to do a job for which it was not designed.
10. **USE PROPER EXTENSION CORD.** Make sure your extension cord is in good condition. When using an extension cord, be sure to use one heavy enough to carry the current your product will draw. An undersized cord will cause a drop in line voltage resulting in loss of power and overheating. The table on page 5 shows the correct size to use depending on cord length and nameplate ampere rating. If in doubt, use the next heavier gauge. The smaller the gauge number, the heavier the cord.
11. **WEAR PROPER APPAREL.** DO NOT wear loose clothing, gloves, neckties, rings, bracelets, or other jewelry which may get caught in moving parts. Nonslip footwear is recommended. Wear protective hair covering to contain long hair.
12. 

ALWAYS WEAR EYE PROTECTION. Any belt/disc sander can throw foreign objects into the eyes which could cause permanent eye damage. ALWAYS wear Safety Goggles (not glasses) that comply with ANSI safety standard Z87.1. Everyday eyeglasses have only impact-resistant lenses. They ARE NOT safety glasses. Safety Goggles are available at Sears. **NOTE:** Glasses or goggles not in compliance with ANSI Z87.1 could seriously hurt you when they break.
13. **WEAR A FACE MASK OR DUST MASK.** Sanding operation produces dust.
14. **SECURE WORK:** Use clamps or a vise to hold work when practical. It's safer than using your hand and it frees both hands to operate tool.
15. **DISCONNECT TOOLS** before servicing, and when changing accessories, such as blades, bits, cutters, and the like.
16. **REDUCE THE RISK OF UNINTENTIONAL STARTING.** Make sure the switch is in OFF position before plugging in.
17. **USE RECOMMENDED ACCESSORIES.** Consult the owner's manual for the recommended accessories. The use of improper accessories may cause risk of injury to persons.
18. **NEVER STAND ON TOOL.** Serious injury could occur if the tool is tipped or if the cutting tool is unintentionally contacted.
19. **CHECK FOR DAMAGED PARTS.** Before further use of the tool, a guard or other part that is damaged should be carefully checked to determine that it will operate properly and perform its intended function. Check for alignment of moving parts, binding of moving parts, breakage of parts, mounting, and any other conditions that may affect its operation. A guard or other part that is damaged should be properly repaired or replaced.
20. **NEVER LEAVE TOOL RUNNING UNATTENDED. TURN THE POWER OFF.** Don't leave the tool until it comes to a complete stop.
21. **DON'T OVERREACH.** Keep proper footing and balance at all times.
22. **MAINTAIN TOOLS WITH CARE.** Keep tools sharp and clean for best and safest performance. Follow instructions for lubricating and changing accessories.
23. **DO NOT** use power tools in the presence of flammable liquids or gases.

SAVE THESE INSTRUCTIONS

24. **DO NOT** operate the tool if you are under the influence of any drugs, alcohol or medication that could affect your ability to use the tool properly.

25. Dust generated from certain materials can be hazardous to your health. Always operate the belt/disc sander in a well-ventilated area and provide for proper dust removal. Use dust collection systems whenever possible.

SPECIFIC SAFETY INSTRUCTIONS FOR BELT/DISC SANDER

⚠WARNING

For your own safety, do not try to use your belt / disc sander or plug it in until it is completely assembled and installed according to the instructions, and until you have read and understood this instruction manual:

1. **USE** sander on horizontal surfaces only. Operating the sander when mounted on non-horizontal surfaces might result in motor damage.

2. **TO STOP** it from tipping over or moving when in use, the sander must be securely fastened to a bench top or supporting surface.

3. **PLACE** the sander so neither the user nor bystanders are forced to stand in line with the abrasive belt or disc.

4. **MAKE SURE** the sanding belt is installed in the correct direction. See directional arrow on back of belt.

5. **ALWAYS** have the tracking adjusted properly so the belt does not run off the pulleys.

6. **DO NOT USE** sanding belts or discs that are damaged, torn, loose. Use only correct size sanding belt and disc. Narrower belts uncover parts that could trap fingers.

7. **MAKE SURE** there are no nails or foreign objects in the part of the workpiece to be sanded.

8. **ALWAYS HOLD** the workpiece firmly when sanding. Keep hands away from sanding belt or disc. Sand only one workpiece at a time.

9. **ALWAYS HOLD** the workpiece firmly on the table when using the disc sander and when using the belt sander.

10. **ALWAYS SAND ON THE DOWNWARD SIDE** of the sanding disc when using the disc sander. Sanding on the upward side of the disc could cause the workpiece to fly out of position, resulting in injury.

11. **ALWAYS** maintain a minimum clearance of 1/16 inch between the table or backstop and the sanding belt or disc.

12. **DO NOT** sand pieces of material that are too small to be safely supported.

13. **KEEP** fingers away from where the belt goes into the dust trap.

14. **WHEN** sanding a large workpiece, provide additional support at table height.

15. **DO NOT** sand with the workpiece unsupported. Support the workpiece with the backstop or table. The only exception is curved work performed on the outer sanding drum. Plan your work support.

16. **NEVER USE ANOTHER PERSON** as additional support for a workpiece longer or wider than the table.

17. **ALWAYS** remove scrap pieces and other objects from the table, backstop or belt before turning the sander "ON."

18. **NEVER** perform layout, assembly or set-up work on the table while the sander is operating.

19. **NEVER** use solvents to clean plastic parts. Solvents could dissolve or otherwise damage the material. Use only a soft damp cloth to clean plastic parts.

20. **SHOULD** any part of your sander be missing, damaged, or fail in any way, or any electrical components fail to perform properly, shut off switch and remove plug from power supply outlet. Replace missing, damaged or failed parts before resuming operation.

21. **NEVER PULL THE POWER CORD** out of the receptacle. Keep cords away from heat, oil and sharp edges.

22. **HAVE AN ELECTRICIAN REPLACE OR REPAIR** damaged or worn cords immediately.

23. When using the belt to grind or sharpen metal or plastic material:
    - **DO NOT** wet grind or polish. Never use a steady stream of water on the workpiece. Dip or quench the workpiece in water to cool it.
    - **DO NOT OVERHEAT THE WORKPIECE.** Move the material across the abrasive and allow it to cool it when it becomes hot.
    - **DO NOT** grind or polish magnesium. It could catch on fire.

SAVE THESE INSTRUCTIONS

GROUNDING INSTRUCTIONS

IN THE EVENT OF A MALFUNCTION OR BREAKDOWN, grounding provides a path of least resistance for electric current and reduces the risk of electric shock. This tool is equipped with an electric cord that has an equipment grounding conductor and a grounding plug. The plug MUST be plugged into a matching receptacle that is properly installed and grounded in accordance with ALL local codes and ordinances.

DO NOT MODIFY THE PLUG PROVIDED. If it will not fit the receptacle, have the proper receptacle installed by a qualified electrician.

IMPROPER CONNECTION of the equipment grounding conductor can result in risk of electric shock. The conductor with the green insulation (with or without yellow stripes) is the equipment grounding conductor. If repair or replacement of the electric cord or plug is necessary, DO NOT connect the equipment grounding conductor to a live terminal.

CHECK with a qualified electrician or service personnel if you do not completely understand the grounding instructions, or if you are not sure the tool is properly grounded.

USE ONLY 3-WIRE EXTENSION CORDS THAT HAVE 3-PRONG GROUNDING PLUGS AND 3-POLE RECEPTACLES THAT ACCEPT THE TOOL'S PLUG. REPAIR OR REPLACE DAMAGED OR WORN CORD IMMEDIATELY.

This tool is intended for use on a circuit that has a receptacle like the one illustrated in FIGURE A. **FIGURE A** shows a 3-prong electrical plug and receptacle that has a grounding conductor. If a properly grounded receptacle is not available, an adapter **(FIGURE B)** can be used to temporarily connect this plug to a 2-contact ungrounded receptacle. The temporary adapter should be used only until a properly grounded receptacle can be installed by a qualified technician. The adapter **(FIGURE B)** has a rigid lug extending from it that MUST be connected to a permanent earth ground, such as a properly grounded receptacle box. The Canadian Electrical Code prohibits the use of adapters.

CAUTION: In all cases, make certain the receptacle in question is properly grounded. If you are not sure have a certified electrician check the receptacle.

⚠WARNING

This belt / disc sander is for indoor use only. Do not expose to rain or use in damp locations.

Fig. A

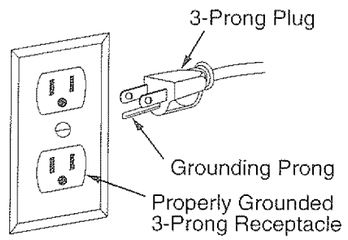

GUIDELINES FOR EXTENSION CORDS

USE PROPER EXTENSION CORD. Make sure your extension cord is in good condition. When using an extension cord, be sure to use one heavy enough to carry the current your product will draw. An undersized cord will cause a drop in line voltage resulting in loss of power and overheating. The table below shows the correct size to use depending on cord length and nameplate ampere rating. If in doubt, use the next heavier gauge. The smaller the gauge number, the heavier the cord.

Be sure your extension cord is properly wired and in good condition. Always replace a damaged extension cord or have it repaired by a qualified person before using it. Protect your extension cords from sharp objects, excessive heat and damp or wet areas.

Use a separate electrical circuit for your tools. This circuit must not be less than #12 wire and should be protected with a 15 Amp time lag fuse. Before connecting the motor to the power line, make sure the switch is in the OFF position and the electric current is rated the same as the current stamped on the motor nameplate. Running at a lower voltage will damage the motor.

Fig. B

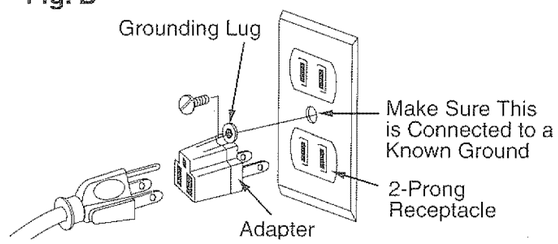

⚠WARNING

This tool must be grounded while in use to protect the operator from electrical shock.

MINIMUM GAUGE FOR EXTENSION CORDS (AWG)
(when using 120 volts only)

Ampere Rating		Total length of cord in feet			
more than	not more than	25'	50'	100'	150'
0	6	18	16	16	14
6	10	18	16	14	12
10	12	16	16	14	12
12	16	14	12	Not recommended	

SAVE THESE INSTRUCTIONS

ACCESSORIES AND ATTACHMENTS

AVAILABLE ACCESSORIES

⚠ WARNING

Use only accessories recommended for this belt/disc sander. Follow instructions that accompany accessories. Use of improper accessories may cause hazards.

Visit your Sears Hardware Department or see the Sears Power and Hand Tool Catalog for the following accessories:

ITEM		STOCK NUMBER
• Abrasive belts, 2 x 42-in.:		
Fine:	120 Grit	28480
Medium:	80 Grit	28481
Coarse:	50 Grit	28482
• Abrasive discs, pressure sensitive, package:		28318
Fine:	120 Grit	
Medium:	80 Grit	
Coarse:	50 Grit	
• Abrasive cleaner		22744

⚠ WARNING

Use only accessories designed for this belt / disc sander to avoid injury from thrown broken parts or workpieces.

Do not use any accessory unless you have completely read the instruction or owner's manual for that accessory.

CARTON CONTENTS

UNPACKING AND CHECKING CONTENTS

⚠ WARNING

To avoid injury, if any part is missing or damaged, do not plug the belt/disc sander in until the missing or damaged part is replaced, and assembly is complete.

Carefully unpack the belt/disc sander and all its parts, an compare against the illustration below.

To protect the belt/disc sander from moisture, a protective coating has been applied to the machined surfaces. Remove this coating with a soft cloth and WD-40.

⚠ WARNING

To avoid fire or toxic reaction, never use gasoline, naphtha, acetone, lacquer thinner or similar highly volatile solvents to clean the belt / disc sander.

TABLE OF LOOSE PARTS

ITEM	DESCRIPTION	QUANTITY
A.	Disc sander	1
B.	Belt table	1
C.	Disc table	1
D.	Miter gauge	1
E.	Dust chute	1

Loose parts:

G.	Handle assembly	3
H.	Phillips screws	6
I.	Washers	3
J.	Tension handle	1
K.	Nut	1
L.	Hex key 3mm, 4mm, 6mm	3

UNPACKING YOUR BELT / DISC SANDER

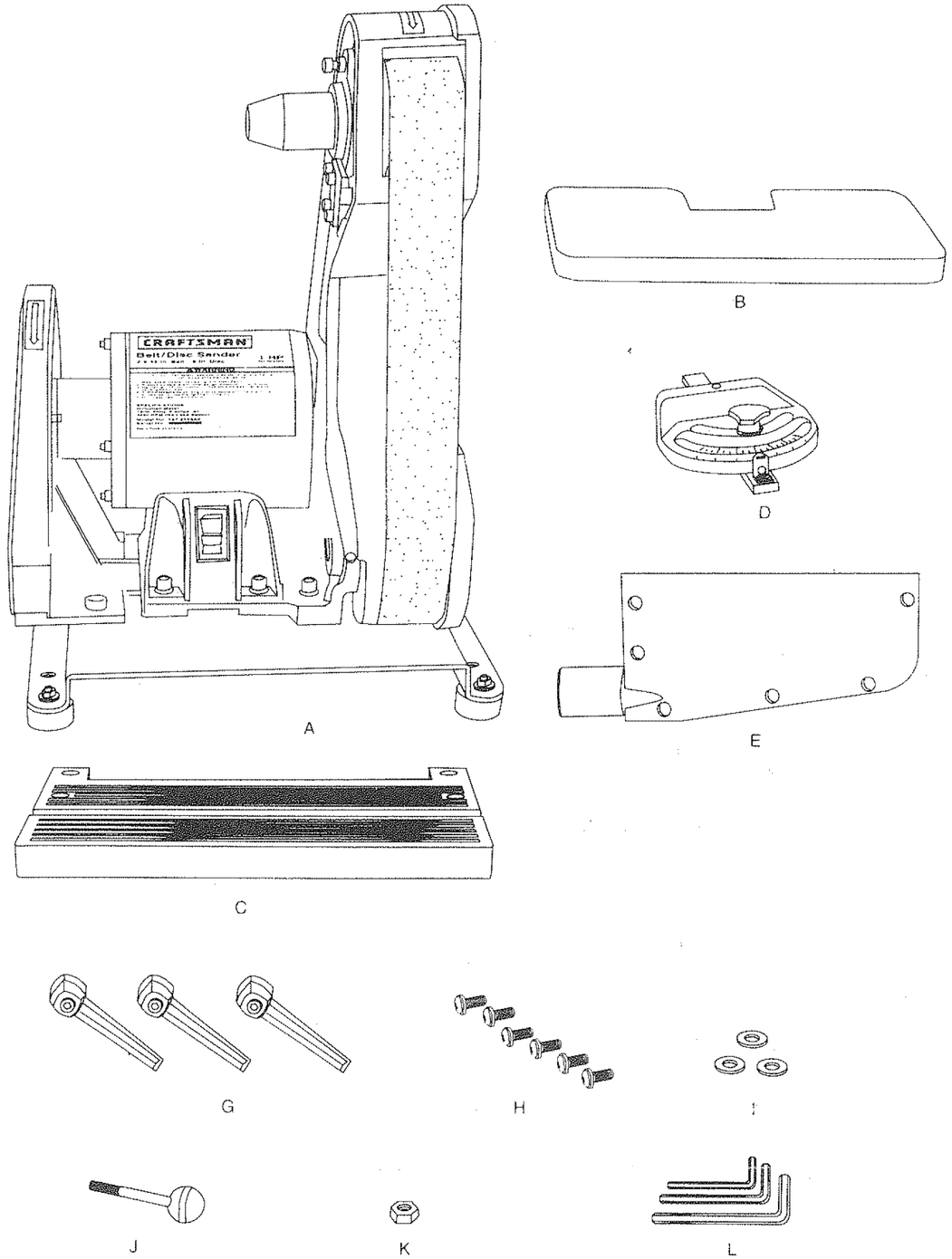

KNOW YOUR BELT / DISC SANDER

Belt tracking bolt
Rotation arrow
Tension handle
Disc guard
Nameplate
Sanding belt
Rotation arrow
Belt backstop
Miter gauge
Tilt index
Belt table
Belt guard
Disc table locking handle
"ON/OFF" switch
Mounting hole
Base
Belt guard knob
Belt housing
Disc guard
Motor
Sanding disc
Dust chute
Disc table
Tilt index
Disc table locking handle
Dust chute
Power cord

ASSEMBLY AND ADJUSTMENTS

ASSEMBLY INSTRUCTIONS

⚠ WARNING

For your own safety, never connect plug to power source outlet until all assembly and adjustment steps are completed, and you have read and understood the safety and operating instructions.

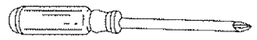
Phillips screwdriver

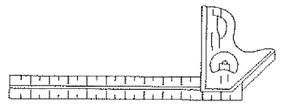
Combination square


Hex keys 10mm (3, 4, and 6 mm included)

This belt / disc sander requires minimal assembly.

⚠ WARNING

When replacing abrasive disc or abrasive belt, or any parts on the sander, turn switch OFF and remove the plug from the power source.

INSTALLING / REPLACING 2" X 42" BELT (FIG . A)

1. Tilt the table (1) out of the way.
2. Remove the belt guard (2) by removing the two belt guard knobs (3).
3. Release the belt tension by SLIGHTLY moving and holding the tension handle (4) down.
4. Remove the abrasive belt (5).
5. Install and align the new abrasive belt on the lower wheel (6), the back wheel (7), and on the top wheel (8). There is an arrow on the inside of the belt. To avoid belt damage, this arrow must point in the same direction as the rotation arrow on the belt housing.
6. Release the belt tension handle (4). Spring action will tension the belt when the handle is released.
7. Make sure the belt is tracking correctly, and adjust if necessary. When the belt is tracking properly it rides on the center of each wheel (see "TRACKING THE BELT").
8. Replace the belt guard (2) and the belt table (1).

NOTE: The belt rotates counterclockwise. When installing a belt, make sure the arrow points in the same direction as the rotation arrow on the top of the belt guard housing, down toward the front belt table.

Fig. A

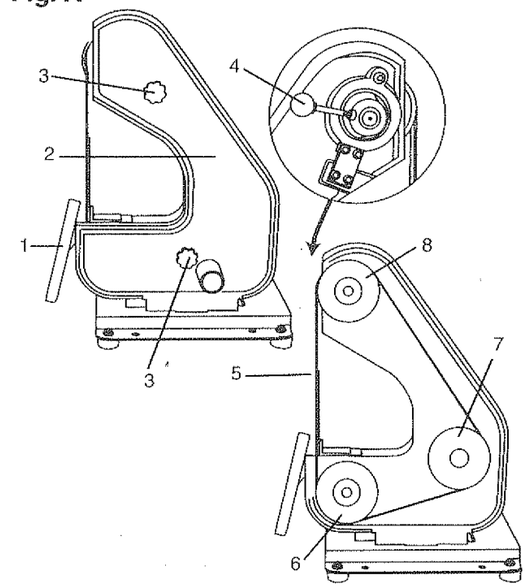

INSTALLING BELT TABLE (FIG. B)

1. Place the slot (5) of the belt table bracket on to the lug (6) on the left side of the belt housing.
2. Place the handle (3) onto the hole (6), Press buttom (4), screw(7) and tighten.
3. Be sure the gap between belt and table is 1/16". Turn the handle to lock the table.

Fig. B

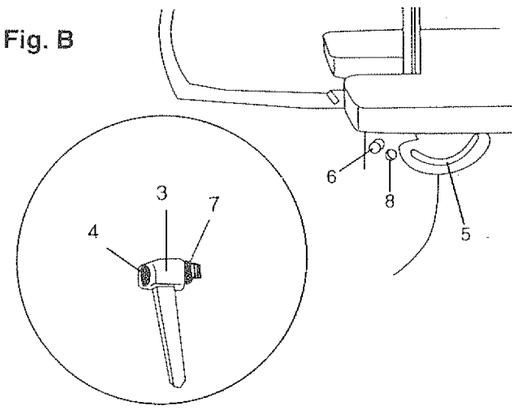

D

INSTALLING / REPLACING 8" ABRASIVE DISC (FIG. C)

1. Remove the table assembly (1) from the sander by loosening and removing the table lock handles (2) and washers from both sides of the housing.
2. To remove the table, tilt it upward while pulling it away from the disc.
3. Remove the dust chute (3) (see "INSTALLING / REMOVING DUST CHUTE" below).
4. Remove the worn abrasive disc (4) by peeling it from the metal disc plate (5).
5. Clean the metal disc plate if necessary. Apply a new adhesive sanding disc to the disc plate.
6. Reattach the dust chute and the table assembly and lock handles.
7. Adjust the table a maximum of 1/16" from the sanding disc, and tighten the lock handles.

Fig. C

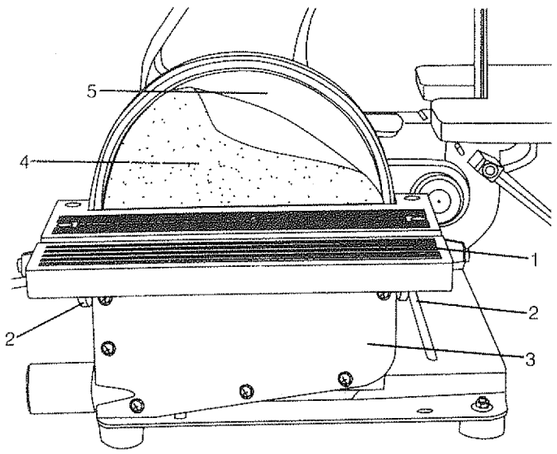

REMOVING AND INSTALLING THE DUST CHUTE (FIG. D)

1. Remove or attach the dust chute (1) to the disc guard housing (2) using the six screws.
2. The dust chute exhaust (3) must point to the side of the sander as shown.

Fig. D

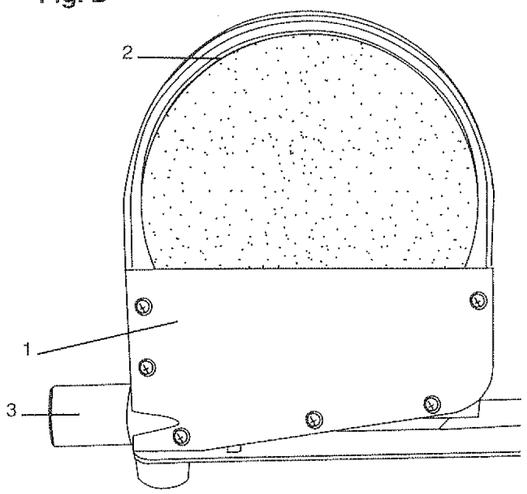

ASSEMBLE THE DISC TABLE (FIG. E)

1. Align the table brackets (1) with the raised track (2) on the sides of the disc guard. Lift the front edge of the table and slide onto the tracks.
2. Place a washer (3) on the table lock handle (4), thread into the hole (5) through the table bracket slot. Repeat on the other side of the table and guard.
3. Be sure the gap between the disc and the disc table is 1/16" or less. Tighten the handles to lock the table.

Fig. E

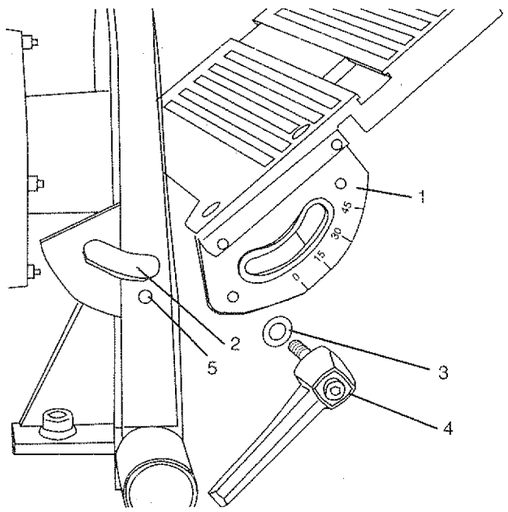

ASSEMBLE THE TENSION HANDLE WITH GRIP (FIG. F)

1. Thread the lock nut (1) completely onto the handle (2).
2. Thread the handle (2) into the hole on the hub (3).
3. Tighten the lock nut against the hub.

Fig. F

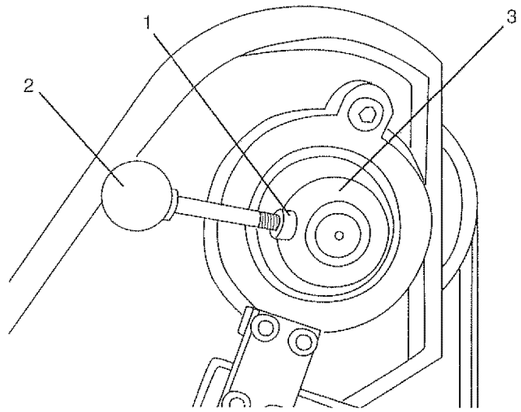

MITER GAUGE (FIG. G)

A miter gauge (1) is supplied with your sander and is used with the disc table. The miter gauge body can be turned 0° to 45° right or left for angle or miter sanding. Loosen knob (2), rotate miter gauge body to the desired angle and tighten lock knob (2).

Fig. G

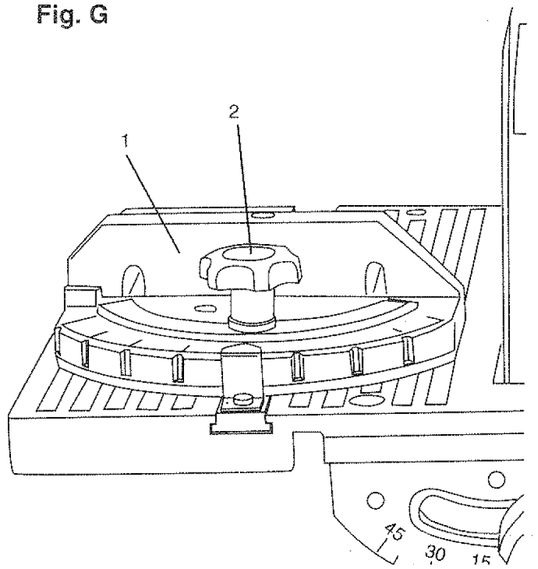

FASTENING SANDER TO WORK SURFACE (FIG. H)

1. To mount your sander in a permanent location such as a sturdy workbench, bolt the sander base to a solid workbench top. The sander base (1) has 4 mounting holes.
2. Place the sander on the work surface, mark the holes on the work surface and drill 3/8" holes. Use bolts, washers, nuts to secure.
3. If the workbench moves or shakes during operation, it must be fastened to the floor.
4. Your sander is designed to be used on horizontal surfaces only. Motor damage may result when mounted on a non-horizontal surface.

Fig.H

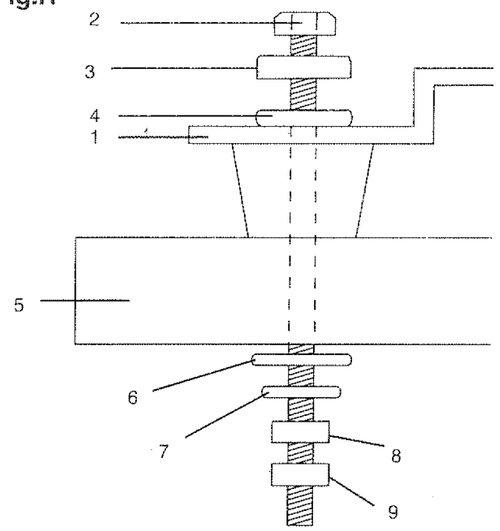

1. Belt disc sander
2. Hex head bolt
3. Rubber washer
4. Flatwasher
5. Workbench
6. Flatwasher
7. Lockwasher
8. Hex nut
9. Jamb nut

NOTE:Secure tool to supporting structure as tool may tip, slide,or walk on supporting structure.

⚠ WARNING

Always turn the switch OFF and unplug the power cord from the outlet before adjusting your sander.

ADJUSTMENT INSTRUCTIONS

TRACKING THE BELT (FIG. I)

1. With the belt guard removed and the sander plugged in, flip the switch ON, then OFF.
2. The belt should remain centered on the wheels (1) as they turn.
3. If the belt moves off center, it needs to be adjusted.
4. If the abrasive belt moves to the left, toward the sander motor, **slightly** turn the adjusting bolt (2) clockwise with a hex key. If the belt moves to the right, away from the sander motor, **slightly** turn the adjusting bolt counterclockwise.
5. Disconnect the power and test the belt tracking and table clearances by hand. Adjust if needed.

   NOTE: Turn the knob SLIGHTLY to set the proper tracking.

6. Replace the belt guard when the belt is properly centered and tracking correctly.

Fig. I

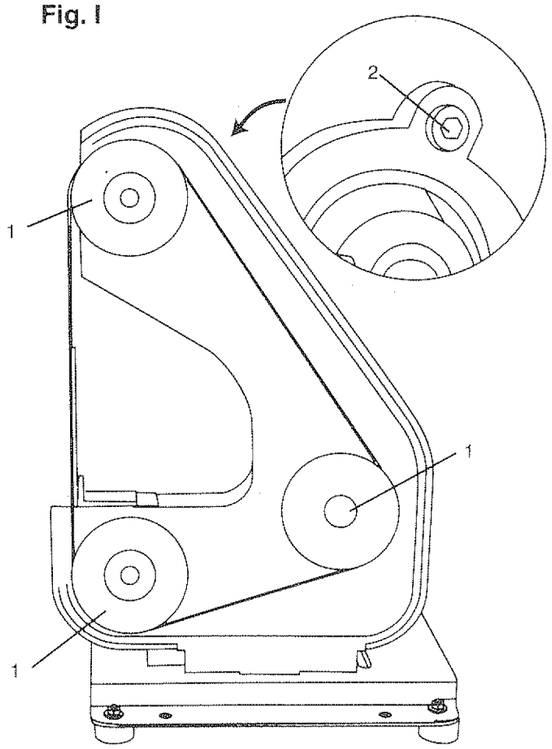

ADJUSTING THE BELT BACKSTOP (FIG. J)

1. Operating with the backstop (1) in place will allow the operator to sand or grind straight edges.
2. The backstop should be adjusted so the belt does not contact it until work is fed into the belt.
3. To adjust the backstop, loosen the bolt (2) with the hex key, adjust and retighten.

Fig. J

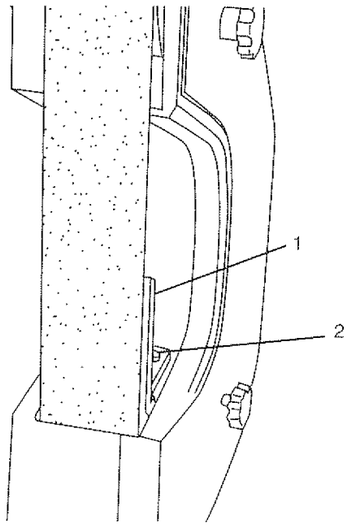

REMOVING THE BACKSTOP FOR CONTOUR SANDING OR POLISHING (FIG. K)

1. Remove the backstop (1) by removing the bolt (2) and washer (3) from the frame.
2. Replace the backstop assembly when finished.

Fig. K

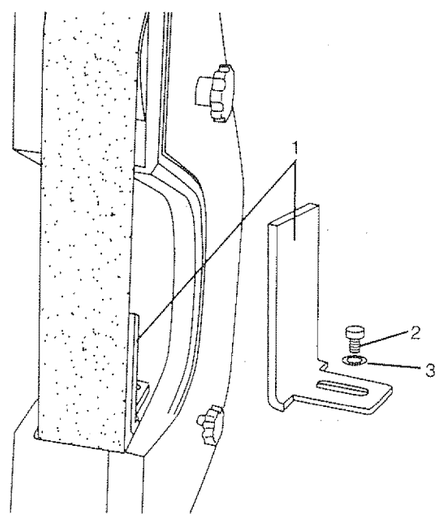

SQUARING THE BELT TABLE (FIG. L)

1. To tilt the table (1) loosen the handle (2) .
2. Use a combination square to set the table at 90˚, perpendicular to the sanding belt.
3. Adjust for the 1/16" clearance between the belt and the table edge.
4. When the belt table is squared to the belt at 90˚, lock it into position by tightening the handle (2).
5. The table can be tilted for bevel sanding.
6. Loosen handle (2). Lower the table to the desired angle.
7. Slide the table toward the belt to set a 1/16" gap between table and belt. Lock handle.

Fig. L

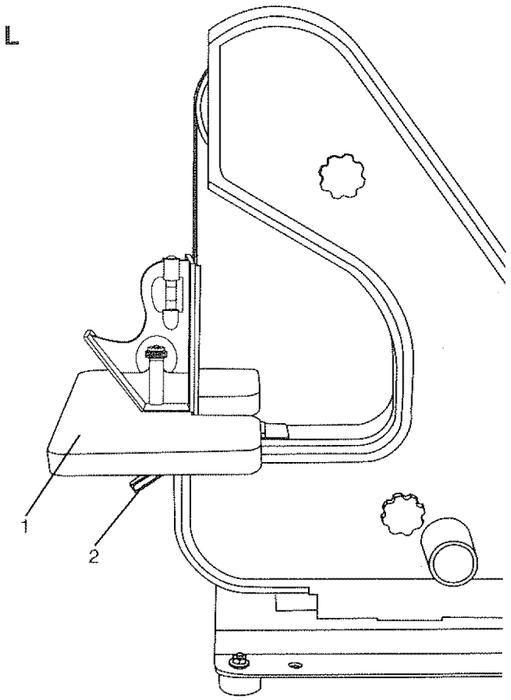

SQUARING THE DISC TABLE (FIG. M)

To ensure accurate end sanding, the work table (1) must be square to the sanding surface.

1. Adjust the table (1) to be 90°, perpendicular to the sanding disc (2).
2. Using a combination square, check that the table is 90° to the sanding disc.
3. If the table is not 90° to the sanding disc, loosen the table lock handles (3), adjust the table, tighten the handles and recheck with the square.

Fig. M

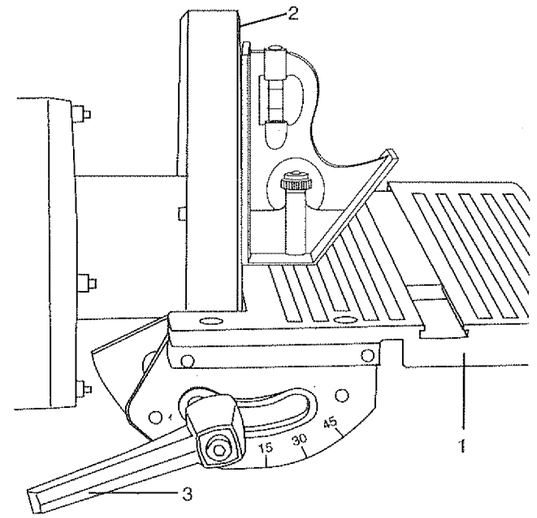

ADJUSTING THE DISC TABLE ANGLE (FIG. N}

1. The disc table is adjustable from 0 to 45˚ for bevel work.
2. To adjust the table, loosen both table lock handles (1). Adjust the table to the correct angle. Use the index (2), located on both sides of the table for an approximate angle.
3. Set the table edge to be 1/16" from the abrasive disc, tighten the lock handle (1) to hold the table angle.

Fig. N

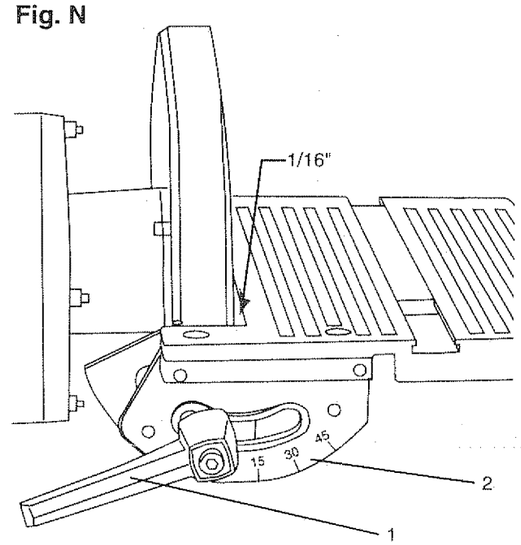

OPERATION

"ON/OFF" SWITCH (FIG. O)

The keyed switch is intended to prevent unauthorized use of the sander.

1. To turn the sander ON insert the yellow key (1) into the key slot (2) in the center of the switch.
2. Push the key firmly into the slot, then push switch to the ON position to start the sander.
3. To turn the sander OFF push the switch to the down position.
4. Remove the yellow switch key, when the sander has come to a complete stop, by gently pulling it outward.

⚠ WARNING

Remove the switch key whenever the sander is not in use. Place it in a safe place and out of reach of children.

Fig. O

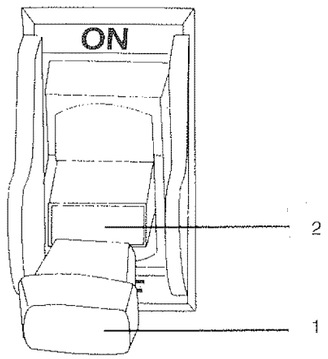

SANDING OPERATIONS

CAUTION: To avoid personal injury and/or damage to the workpiece, become familiar with the rotation of the belt and disc sanding surfaces.

The belt sander rotates clockwise, or downward toward the table. The disc sander also rotates clockwise, downward toward the table on the right side of the disc at all times. Using the left side of the disc will cause the workpiece to fly up or kickback and could result in injury. Review this instruction manual for correct operation, adjustments, and basic sanding operations. Apply only enough pressure to remove material; excessive pressure will reduce sanding efficiency.

⚠ WARNING

After sanding wood and other non-metal materials, clean the area of sawdust and debris before grinding metal. Sparks could ignite debris and cause a fire.

ABRASIVE DISC (FIG. P)

⚠ WARNING

To avoid injury from slips, jams or thrown pieces, make sure all adjustments are made. Review section "ASSEMBLY AND ADJUSTMENTS" for correct disc adjustments.

End sanding and outside curve sanding.

1. Use disc for sanding the ends of small and narrow workpieces and outside curved edges. Always work on the right side of the disc center (downward rotation side), holding the workpiece firmly and applying light pressure against the sanding disc.
2. The disc moves the fastest and removes more material at the outer edge.

⚠ WARNING

Using the left side (upward rotation side) of the disc will cause the workpiece to fly up or kick back and could result in injury.

Fig. P

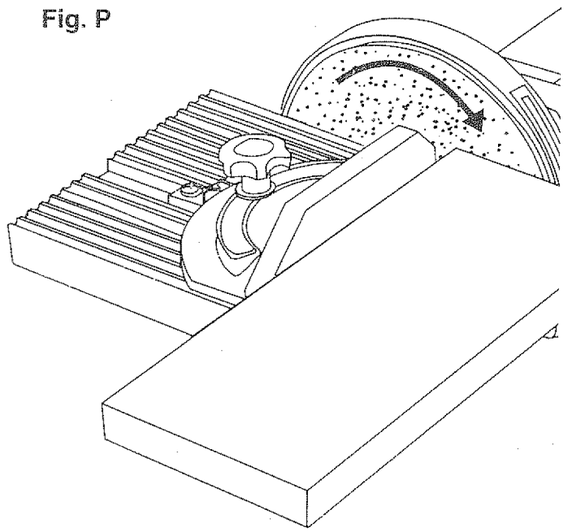

ABRASIVE BELT

The abrasive belt can be used to sand wood, deburr metal, or polish plastic and glass. The belt is most efficient when used with the table. The 1" belt size is convenient for getting into corners and concave curved edges.

Straight sanding (FIG. Q)

1. Use to sand wood, remove metal burrs, polish plastics and glass (1).
2. Keep the backstop (2) in place for straight sanding or grinding operations.

Contour sanding (FIG. R)

1. Remove the backstop to make the abrasive belt flexible for contour sanding operations (1).
2. Move the workpiece against the belt to follow contours of the workpiece (2).

Sharpening (FIG.S)

1. Adjust the metal table (1) to the desired angle.
2. Make a wooden table-rest that is the same width as the metal table. Use the belt sander to notch the back of the table-rest to match the angle of the metal table.
3. Place the table-rest (2) on the metal table, and use the sander to bevel its front edge until the abrasive belt comes in contact with its top surface.
4. Position the table-rest 1/16" from the abrasive belt and clamp it to the metal table.
5. Keep the backstop (3) in place.
6. Hold the tool (4) firmly on the table-rest and move tool gently toward the abrasive belt while sharpening.

Fig. Q

Straight sanding

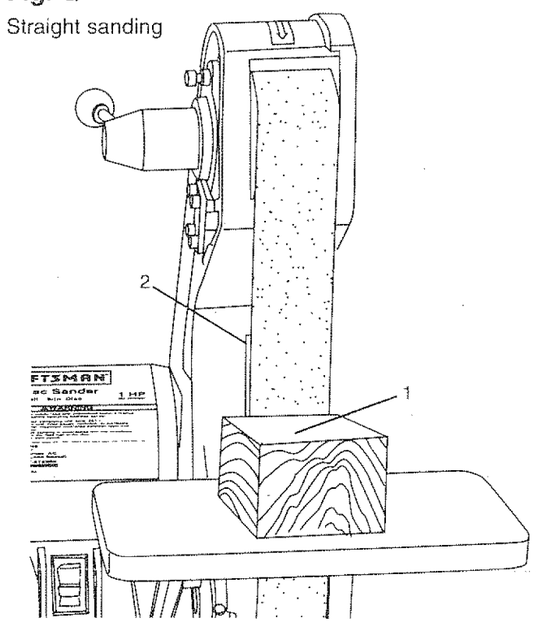

Fig. R

Contour sanding

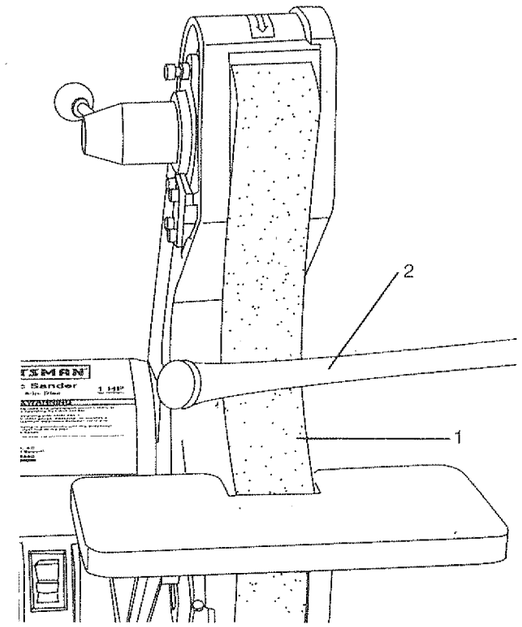

Fig.S

Sharpening

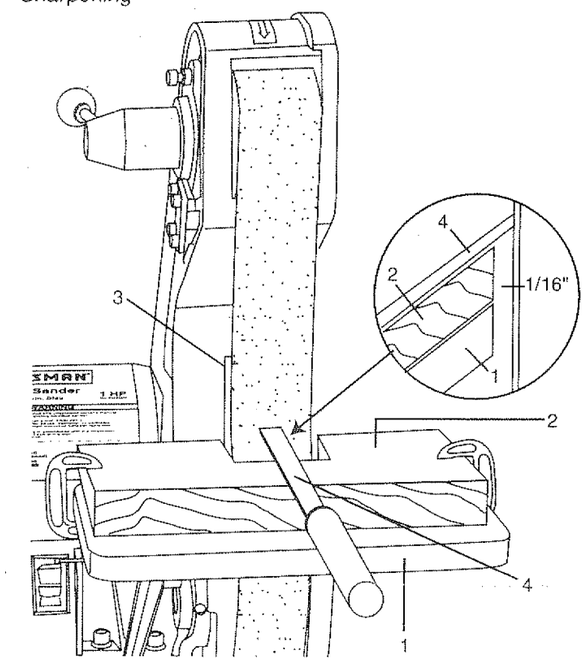

⚠ WARNING

For your safety, turn switch OFF, and remove the power cord from the electrical outlet before adjusting, cleaning, or performing maintenance on your sander.

⚠ WARNING

To avoid electric shock or fire, all repairs to the electrical components should be done by qualified service technicians.

Before each use check for damaged, missing, or worn parts; check for alignment of moving parts, binding, improper mounting, or any other conditions that may affect the operation. Should any of these conditions exist, do not use the sander until properly repaired or parts are replaced. Frequently blow or vacuum dust from all sander parts and motor housing.

⚠ WARNING

After sanding wood or non-metallic material, always clean the sawdust from sander or work area before grinding or sharpening metal workpieces. Sparks could ignite and cause a fire.

LUBRICATION

Ball bearings are grease packed at the factory and require no further lubrication. Use a spray lubricant to ensure smooth operation on all moving table parts.

TROUBLESHOOTING GUIDE

⚠ WARNING

Turn switch OFF and always remove plug from power source before making any adjustments or repairs.

⚠ WARNING

All electrical or mechanical repairs, should be done only by qualified service technicians. Contact the nearest Sears Service Center.

PROBLEM	PROBABLE CAUSE	REMEDY
Motor will not run.	1. Defective or broken ON/OFF switch. 2. Defective or damaged switch cord. 3. Defective or damaged switch relay. 4. Burned out motor. 5. Blown house fuse.	1-3. Replace all broken or defective parts before using sander. 4. Consult your local Sears Service Center. Any attempt to repair this motor may create a hazard unless repair is done by a qualified technician. 5. Replace house fuse. Turn OFF other appliances and power tools on the same circuit.
Machine slows down while sanding.	1. Operator applying too much pressure to workpiece. 2. Dirt on wheels. 3. Worn or stretched belt.	1. Use less pressure in applying workpiece to sanding surface. 2. Clean wheels. 3. Replace pulley belt.
Sanding belt runs off pulleys.	1. Not tracking properly.	1. Adjust tracking. See section "TRACKING".
Wood burns while sanding.	1. Sanding disc or belt glazed with sap. 2. Excessive pressure being applied to workpiece.	1. Replace belt or disc. 2. Reduce pressure applied to workpiece.
Motor overheats.	1. Motor overload.	1. Reduce motor load. Allow to cool off before restarting.

2" x 42" BELT/DISC SANDER PARTS LIST

MODEL NO. 137.215280

⚠ WARNING

When servicing use only CRAFTSMAN replacement parts. Use of any other parts may create a HAZARD or cause product damage.

⚠ WARNING

Any attempt to repair or replace electrical parts on this belt / disc sander may create a HAZARD unless repair is done by a qualified service technician. Repair service is available at your nearest Sears Service Center.

Always order by PART NUMBER, not by key number

Key No.	Part No.	Description	Size	Q'ty
1	3AB00101	Base		1
2	STD551037	Flat washer	3/8	5
3	STD852005	Lock washer	5mm	4
4	3AB00401	Socket head bolt	M8*30	4
5	STD522507	Hex. head bolt	1/4"*5/8"	4
6	STD551031	Flat washer	5/16"	8
7	3AB00701	Rubber foot		4
8	STD551025	Flat washer	1/4"	8
9	STD541025	Hex. nut	1/4"	4
10	3AB01001	Screw	M10*12	1
11	3AB01101	Capacitor cap		1
12	3AB01201	Capacitor		1
13		Set screw w/i washer	3/16*3/8	6
14	3AB01401	Capacitor clamp		1
15	STD541025	Hex. nut	1/4"-20	4
16	STD551025	Spring washer	1/4"	4
17	3AB01701	Socket head bolt	8-1.25*25mm	4
18	3AB01801	Strain relief plate		1
19	3AB01901	Strain relief		1
20	3AB02001	Line cord		1
21	3AB02101	Relay		1
22	3AB02201	Strain relief bushing		1
23	3AB02301	Thread forming screw	3/16*3/8	2
24	3AB02401	Motor housing base		1
25	3AB02501	Switch with key		1
26		Copper washer		1
27		Set screw w/i washer	3/16*1/4	2
28	STD840508	Hex. nut	5mm-.80	4
29	3AB02901	End shield		2
30	3AB03001	Bearing	6203 ZZ	2
31	3AB03101	Motor fan		1
32	3AB03201	Armature		1
33	3AB03301	Stator		1
34	STD512510	Pan head screw	1/4*7/8	4
35	3AB03501	Motor housing		1
36	3AB03601	Pan head screw	5-.80*163mm	4
37	3AB03701	Miter gauge bar		1
38	3AB03801	Indicator		1
39	3AB03901	Cross head screw	4*6mm	1
40	3AB04001	Protractor scale		1
41	STD551025	Flat washer	1/4"	1
42	3AB04201	Knob		1
43	3AB04301	Miter gauge assembly	(Ref. Nos.37-42,99,100	1
44	3AB04401	Flat head screw	6*15mm	4
45	3AB04501	Disc table		1
46	3AB04601	Armature guard		1
47	3AB04701	Handle		2
48	3AB04801	Right trunnion		1
49	3AB04901	Disc guard		1
50	3AB05001	Nut	M8	4

Key No.	Part No.	Description	Size	Q'ty
51	3AB05101	Aluminum disc	8"	1
52	3AB05201	Key	5*5*30mm	1
53	3AB05301	Abrasive disc asst.	8"	1
54	3AB05401	Dust chute		1
55	3AB05501	Left trunnion		1
56	3AB05601	Set screw	6-.80*6mm	1
57	3AB05701	Socket head bolt	10-1.5*20mm	2
58	3AB05801	Belt housing		1
59	3AB05901	Handle		1
60	STD541025	Hex. nut	1/4"	1
61	3AB06101	Hex. head bolt	8-1.25*1[illegible]mm	2
62	STD551031	Flat washer	5/16"	3
63	3AB06301	Belt table bracket		1
64	3AB06401	Belt table		1
65	3AB06501	Set screw	8-12*12mm	1
66	3AB06601	Shaft		1
67	3AB06701	Bearing	6202 ZZ	4
68	3AB06801	Idler wheel		2
69	3AB06901	Retaining ring	S-15	2
70	3AB07001	Abrasive belt (medium)	2*42"	1
71	3AB07101	Stand off		2
72	3AB07201	Drive wheel		1
73	3AB07301	Set screw	6-1.0*10mm	1
74	3AB07401	Belt cover		1
75	3AB07501	Knob		2
76	3AB07701	Retaining ring		1
77	3AB07601	Tracking wheel cam shaft	S-17	1
78	3AB07801	Tension spring		1
79	3AB07901	Spring cap		1
80	3AB08001	Handle with knob		1
81	3AB08101	Tracking bracket		1
82	STD840610	Hex. nut	6mm-1.0	1
83	3AB08301	Socket head bolt	6-1.0*20mm	1
84	3AB08401	Spring plate		2
85	3AB08501	Socket head bolt	5-.80*10mm	2
86	3AB08601	Socket head bolt	5-.80*12mm	2
87	3AB08701	Belt platen	2"	1
88	3AB08801	Socket head bolt	8-1.25*16mm	1
89	3AB08901	Hex wrench	6mm	1
90	3AB09001	Hex wrench	4mm	1
91	3AB09101	Hex wrench	3mm*140mm	1
92	STD551131	Lock washer	5/16"	4
93		Set screw w/i washer	3/16*1/4	2
94		Serrated washer 5mm	5mm	1
95		Cable	#22,#200mm	1
96		Connector	A-3	1
97		Cable	#18,100mm	1
98	3AB09801	Set screw	1/4 x 3/8mm	1
99	3AB09901	Flat washer	4mm	1
100	3AB10001	Plastic washer	1/4"	1
*	137215280001	Owner's manual		1
*	137215280111	Nameplate / Warning label		1
*	137215280222	Rotation label		1

2" x 42" BELT/DISC SANDER

MODEL NO. 137.215280