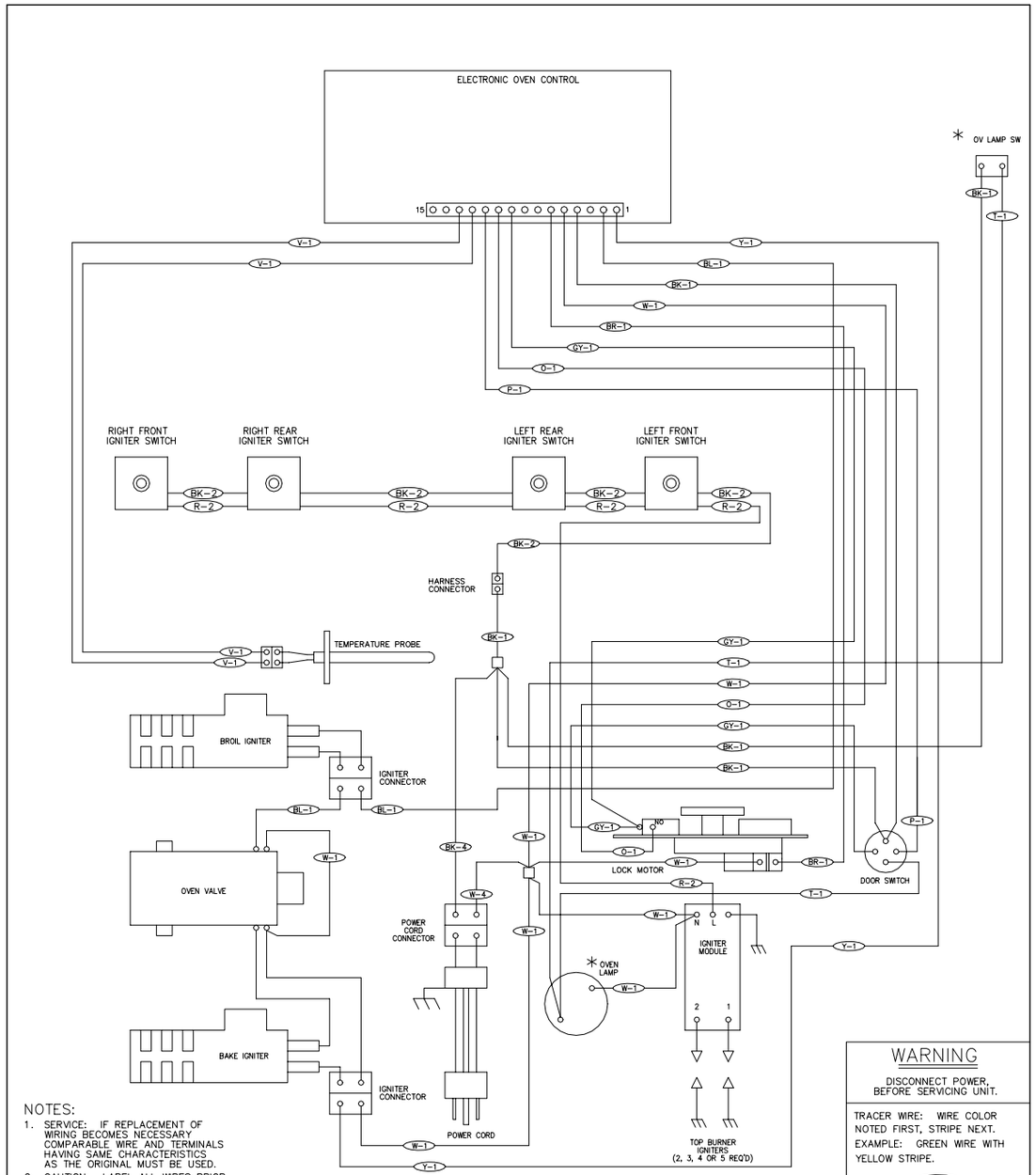


NOTES:

1. SERVICE: IF REPLACEMENT OF WIRING BECOMES NECESSARY COMPARABLE WIRE AND TERMINALS HAVING SAME CHARACTERISTICS AS THE ORIGINAL MUST BE USED.
2. CAUTION: LABEL ALL WIRES PRIOR TO DISCONNECTION WHEN SERVICING CONTROLS. WIRING ERRORS CAN CAUSE IMPROPER AND DANGEROUS OPERATION. VERIFY PROPER OPERATION AFTER SERVICING.
3. * THESE ITEMS MAY NOT APPEAR ON ALL MODELS.

| WIRE | AWG | TEMP °C | UL STYLE |
|---|---|---|---|
| 4 | 16 | 125 | 3173 |
| 3 | 18 | 125 | 3173 |
| 2 | 20 | 150 | 3321 |
| 1 | 20 | 125 | 3173 |

316255205

## WARNING

DISCONNECT POWER, BEFORE SERVICING UNIT.

TRACER WIRE: WIRE COLOR NOTED FIRST, STRIPE NEXT.
EXAMPLE: GREEN WIRE WITH YELLOW STRIPE.

G/Y-8

COLOR CODE

| | | | |
|---|---|---|---|
| BK | BLACK | P | PINK |
| BL | BLUE | PR | PURPLE |
| BR | BROWN | R | RED |
| C | COPPER | T | TAN |
| G | GREEN | V | VIOLET |
| GY | GRAY | W | WHITE |
| O | ORANGE | Y | YELLOW |

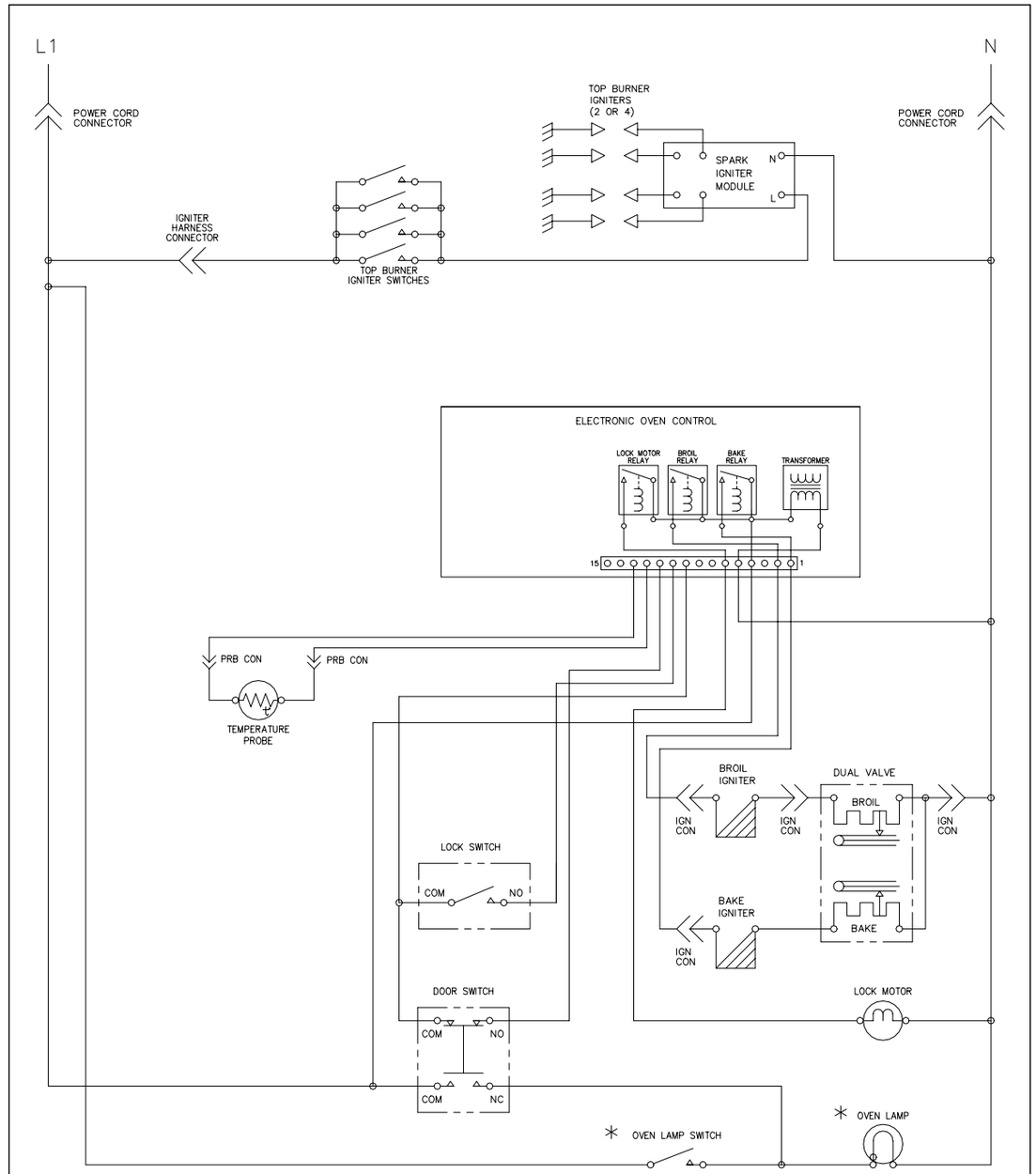


NOTES:

1. CIRCUIT SHOWN WITH ALL CONTROLS SET TO OFF, OVEN DOOR CLOSED AND UNLOCKED.
2. COMPONENTS WITH * DO NOT APPEAR ON ALL MODELS.

316255205