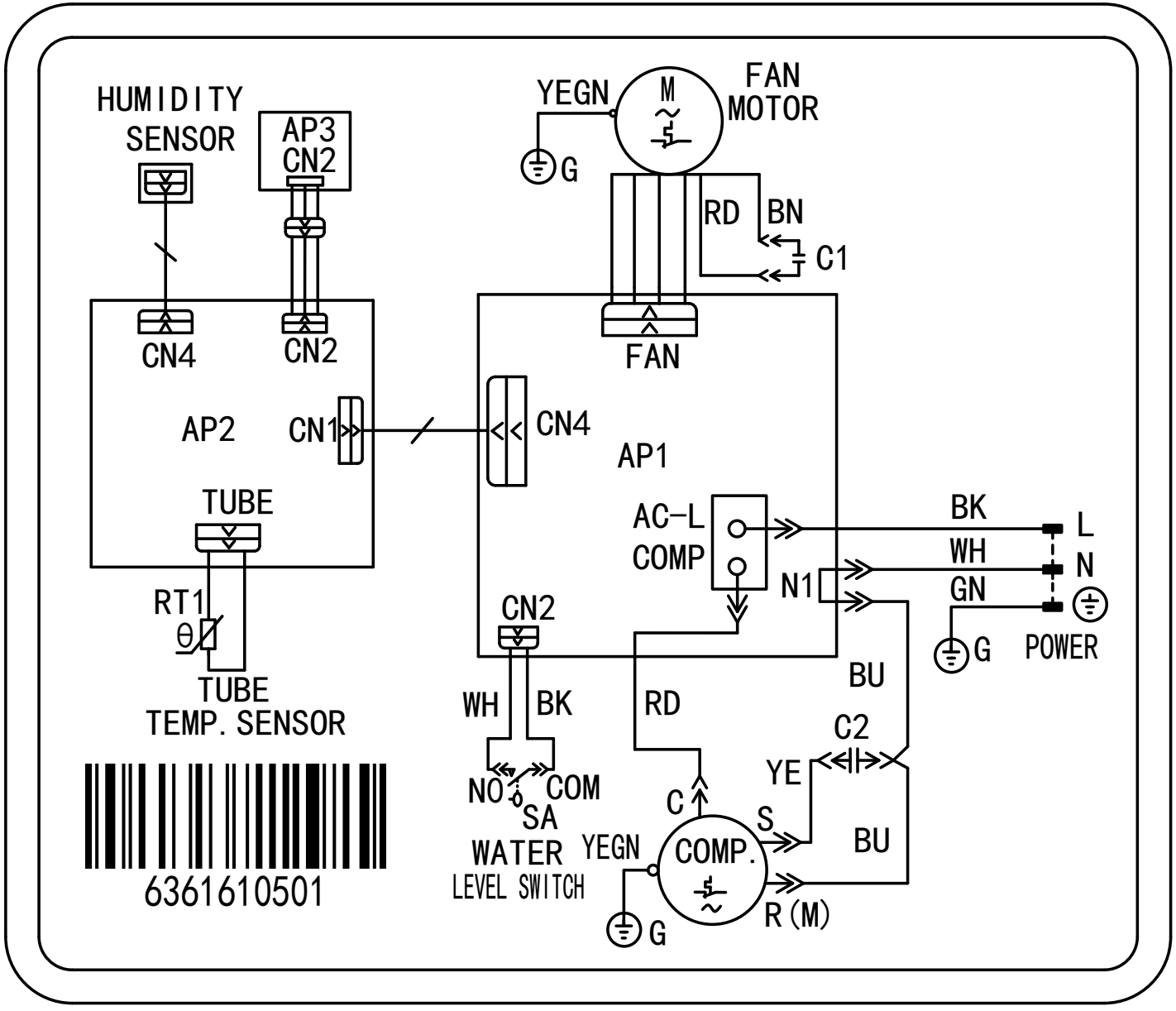
HUMIDITY SENSOR
AP3
CN2
CN4
CN2
AP2
CN1
TUBE
RT1
θ
TUBE TEMP. SENSOR
6361610501
YEGN
M
FAN MOTOR
G
RD
BN
C1
FAN
CN4
AP1
AC-L
COMP
N1
CN2
WH
BK
NO
SA
COM
WATER LEVEL SWITCH
RD
C
YEGN
COMP.
G
S
R (M)
C2
YE
BU
BU
BK
WH
GN
L
N
G
POWER